ECONOMY RANGE

5.08mm pitch pluggable rising clamp terminal blocks

Product overview

- 2-12 pole solid block
- Up to 24 poles available
- Pluggable male-female connectors
- Professional rising clamp terminals
- Closed headers
- Polarised mouldings
- Moulded in green UL94-V0 flame retardant PA66
- 0.33-2mm² (22-14AWG) solid & stranded cable
- Captive screws
- Guided pin alignment
- c UL us approved

SPECIFICATION	
Rating	15A 300V
Insulation resistance	1000M Ω/1000V
Withstand voltage	AC1000V/1min
Contact resistance	20m Ω
Working temperature	-40°C to +105°C
Mouldings	UL94-V0 flame retardant PA66
Wire protector	Tin plated, phosphor bronze
Screw/torque	M2.5 steel, tin plated 0.4Nm
Recommended PCB hole size	ø1.7mm

PART NO.	POLES	LENGTH
CTB9209/2	2	10.2mm
CTB9209/3	3	15.2mm
CTB9209/4	4	20.3mm
CTB9209/5	5	25.4mm
CTB9209/6	6	30.5mm
CTB9209/7	7	35.6mm
CTB9209/8	8	40.6mm
CTB9209/9	9	45.7mm
CTB9209/10	10	50.8mm
CTB9209/11	11	55.9mm
CTB9209/12	12	61mm

CTB9209

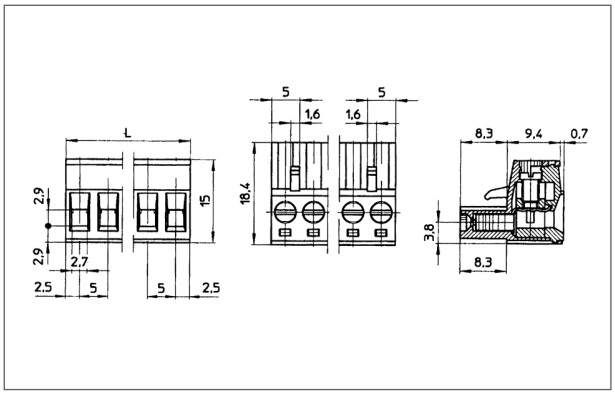

PART NO.	POLES	LENGTH
CTB922VJ/2S	2	10.2mm
CTB922VJ/3S	3	15.2mm
CTB922VJ/4S	4	20.3mm
CTB922VJ/5S	5	25.4mm
CTB922VJ/6S	6	30.5mm
CTB922VJ/7S	7	35.6mm
CTB922VJ/8S	8	40.6mm
CTB922VJ/9S	9	45.7mm
CTB922VJ/10S	10	50.8mm
CTB922VJ/11S	11	55.9mm
CTB922VJ/12S	12	61mm

CTB922VJ S

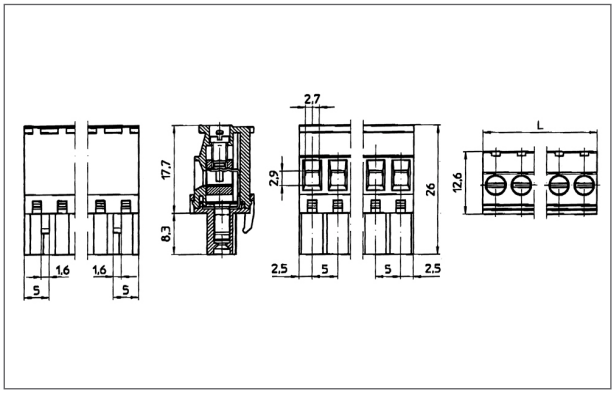

PART NO.	POLES	LENGTH
CTB922VJ/2R	2	10.2mm
CTB922VJ/3R	3	15.2mm
CTB922VJ/4R	4	20.3mm
CTB922VJ/5R	5	25.4mm
CTB922VJ/6R	6	30.5mm
CTB922VJ/7R	7	35.6mm
CTB922VJ/8R	8	40.6mm
CTB922VJ/9R	9	45.7mm
CTB922VJ/10R	10	50.8mm
CTB922VJ/11R	11	55.9mm
CTB922VJ/12R	12	61mm

CTB922VJ R

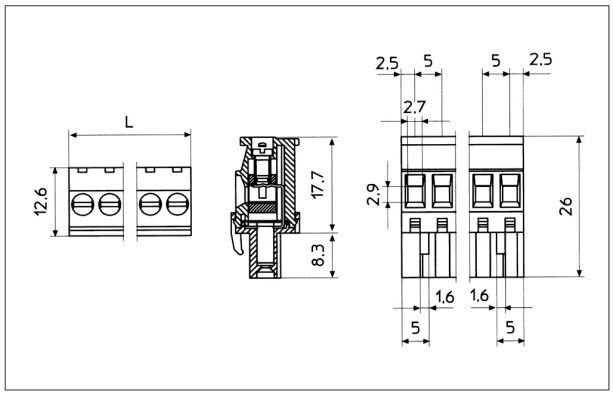

+44 (0)1638 716101 | sales@camdenboss.com | www.camdenboss.com

We operate a constant improvement policy, our products are subject to change without notice.

Vers 1

bsi. ISO 9001 Quality Management ISO 14001 Environmental Management
FM 28614 EMS 613558