Max. 9.6 m³/h

DC centrifugal fans

☐ 51 x 15 mm

- **Material:** Scroll housing: GRP[1)]
  Impeller: GRP[1)]
- **Direction of air flow:** Axial: Intake,
  Centrifugal: Exhaust
- **Connection:** via single wires AWG 26, TR 64
- **Highlights:** Forward-curved impeller
- **Weight:** 40 g

- **Possible special versions:**
  (See chapter DC fans - specials)
  - Speed signal - PWM control input
  - Moisture protection

1) Fiberglass-reinforced plastic

Series RLF 35 **Nominal data**	Air flow	Air flow	**Nominal voltage**	Voltage range	Sound power level	Sintec sleeve bearings Ball bearings	Power consumption	Nominal speed	Temperature range	Service life L_{10} (40 °C) ebm-papst standard Service life L_{10} (T_{max}) ebm-papst standard	Life expectancy L_{10IPC} (40 °C) see page 17	Curve
Type	**m³/h**	**cfm**	**VDC**	**VDC**	**Bel(A)**	**☐/■**	**Watts**	**rpm⁻¹**	**°C**	**Hours**	**Hours**	
RLF 35-8/12 N	9.6	5.64	**12**	8...13.2	5.5	■	3.5	6 700	-20...+70	60 000 / 30 000	102 500	①
RLF 35-8/14 N	9.6	5.64	**24**	14...28	5.5	■	4.3	6 700	-20...+70	60 000 / 30 000	102 500	①

Subject to change

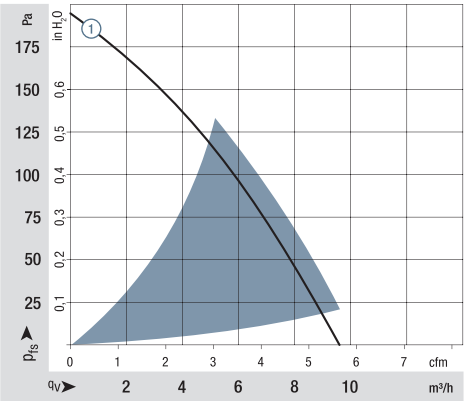

Air performance measured according to: ISO 5801.
Installation category A, without contact protection.
Noise: Total sound power level L_WA ISO 103002 measured on a hemisphere with a radius of 2 m.
Sound pressure level L_pA measured at 1 m distance from fan axis.
The values given are applicable only under the specified measuring conditions and may differ depending on the installation conditions.
In the event of deviation from the standard configuration, the parameters must be checked after installation!
For detailed information see http://www.ebmpapst.com/general conditions

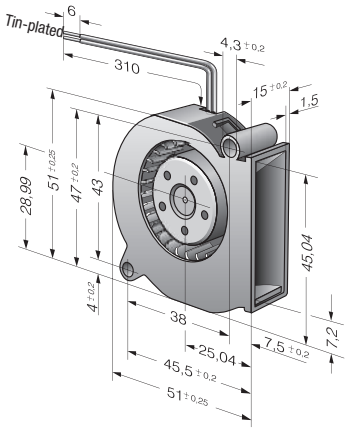

ebmpapst