Aluminum electrolytic capacitors

Snap-in capacitors

Series/Type: **B43504**

Date: December 2013

© EPCOS AG 2013. Reproduction, publication and dissemination of this publication, enclosures hereto and the information contained therein without EPCOS' prior express consent is prohibited.

Long-life grade capacitors

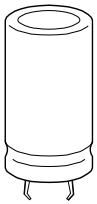

Applications

- Frequency converters
- Solar inverters
- Uninterruptible power supplies
- Professional power supplies
- Medical appliances
- Telecommunications

Features

- High reliability
- High CV product, compact
- High ripple current capability
- Low ESR
- Different case sizes available for each capacitance value
- Capacitors with all insulation versions pass the needle flame test according to IEC 60695-11-5 for all flame exposure times up to 120 s
- RoHS-compatible

Construction

- Charge/discharge-proof, polar
- Aluminum case, fully insulated with PVC
- Version with PET insulation available
- Version with additional PET insulation cap on terminal side available for insulating the capacitor from the PCB
- Snap-in solder pins to hold component in place on PC-board
- Minus pole marking on case surface
- Minus pole not insulated from case
- Overload protection by safety vent on the base

Terminals

- Standard version with 2 terminals, 2 lengths available: 6.3 and 4.5 mm
- 3 terminals to ensure correct insertion: length 4.5 mm

Specifications and characteristics in brief

Rated voltage V_R Surge voltage V_S	200 ... 450 V DC $1.15 \cdot V_R$ (for $V_R \leq 250$ V DC) $1.10 \cdot V_R$ (for $V_R \geq 400$ V DC)	
Rated capacitance C_R Capacitance tolerance	47 ... 2200 µF ±20% ≙ M	
Dissipation factor tan δ (20 °C, 120 Hz)	$V_R \leq 400$ V DC: tan δ ≤ 0.15 $V_R \geq 420$ V DC: tan δ ≤ 0.20	
Leakage current I_{leak} (5 min, 20 °C)	$I_{leak} \leq 0.3\ \mu A \cdot \left(\frac{C_R}{\mu F} \cdot \frac{V_R}{V}\right)^{0.7} + 4\ \mu A$	
Self-inductance ESL	Approx. 20 nH	
Useful life[1)] 105 °C; V_R; $I_{AC,R}$ 85 °C; V_R; $I_{AC,\,max}$ 40 °C; V_R; $1.9 \cdot I_{AC,R}$	 > 3000 h > 6500 h > 200000 h	Requirements: ΔC/C ≤ ±20% of initial value tan δ ≤ 2 times initial specified limit I_{leak} ≤ initial specified limit
Voltage endurance test 105 °C; V_R	2000 h	Post test requirements: ΔC/C ≤ ±10% of initial value tan δ ≤ 1.3 times initial specified limit I_{leak} ≤ initial specified limit
Vibration resistance test	To IEC 60068-2-6, test Fc: Frequency range 10 Hz ... 55 Hz, displacement amplitude 0.35 mm, acceleration max. 5 *g*, duration 3 × 2 h. Capacitor mounted by its body which is rigidly clamped to the work surface.	
Characteristics at low temperature	Max. impedance ratio at 100 Hz	

V_R	≤ 400 V	≥ 420 V
$Z_{-25\,°C} / Z_{20\,°C}$	4	7
$Z_{-40\,°C} / Z_{20\,°C}$	7	14

IEC climatic category	To IEC 60068-1: ■ $V_R \leq 400$ V DC: 40/105/56 (−40 °C/+105 °C/56 days damp heat test) ■ $V_R \geq 420$ V DC: 25/105/56 (−25 °C/+105 °C/56 days damp heat test) The capacitors can be operated in the temperature range of −40 °C to +105 °C but the impedance at −40 °C should be taken into consideration.
Detail specification Sectional specification	Similar to CECC 30301-809 IEC 60384-4

1) Refer to chapter "General technical information, 5 Useful life" on how to interpret useful life.

B43504

Compact – 105 °C

Dimensional drawings

Snap-in capacitors with standard insulation (PVC or PET)

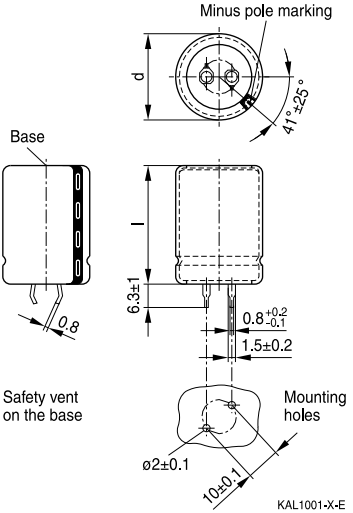

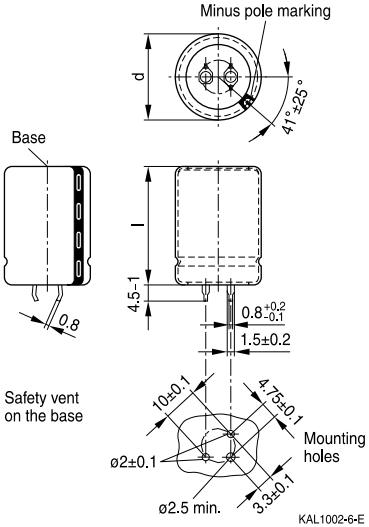

Snap-in terminals, length (6.3 ±1) mm. Also available in a shorter version with a length of (4.5 −1) mm. PET insulation is marked with label "PET" on the sleeve.

Dimensions (mm)		Approx.	Packing
d +1	l ±2	weight (g)	units (pcs.)
22	25	9	160
22	30	12	160
22	35	15	160
22	40	18	160
22	45	20	160
25	25	13	130
25	30	17	130
25	35	19	130
25	40	22	130
25	45	25	130
25	50	29	130
25	55	32	130

Snap-in capacitors are also available with 3 terminals (length (4.5 −1) mm). PET insulation is marked with label "PET" on the sleeve.

Dimensions (mm)		Approx.	Packing
d +1	l ±2	weight (g)	units (pcs.)
30	25	17	80
30	30	23	80
30	35	29	80
30	40	36	80
30	45	41	80
30	50	46	80
30	55	53	80
35	25	22	60
35	30	29	60
35	35	36	60
35	40	41	60
35	45	56	60
35	50	70	60
35	55	81	60

Snap-in capacitors with PVC insulation and PET insulation cap on terminal side

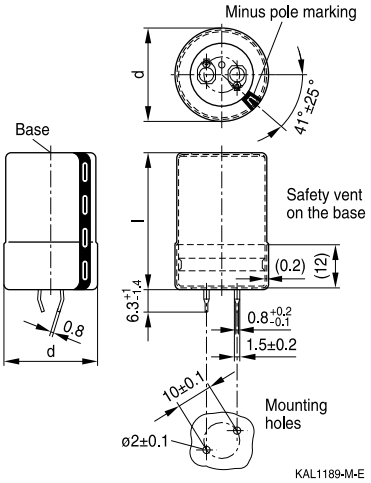

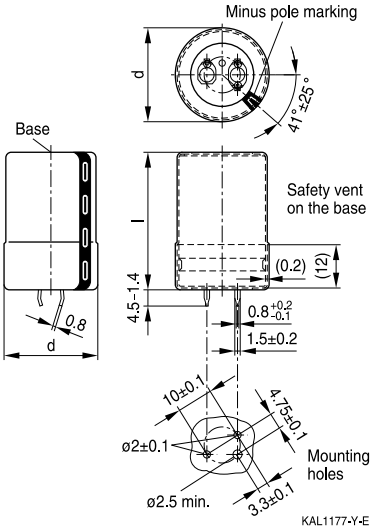

Snap-in terminals, length (6.3 +1/−1.4) mm. Also available in a shorter version with a length of (4.5 −1.4) mm. PET insulation cap is positioned under the insulation sleeve.

Dimensions (mm)		Approx.	Packing
d +1.4	l +2.2/−2	weight (g)	units (pcs.)
22	25	9	160
22	30	12	160
22	35	15	160
22	40	18	160
22	45	20	160
25	25	13	115
25	30	17	115
25	35	19	115
25	40	22	115
25	45	25	115
25	50	29	115
25	55	32	115

Snap-in capacitors are also available with 3 terminals (length (4.5 −1.4) mm). PET insulation cap is positioned under the insulation sleeve.

Dimensions (mm)		Approx.	Packing
d +1.4	l +2.2/−2	weight (g)	units (pcs.)
30	25	17	80
30	30	23	80
30	35	29	80
30	40	36	80
30	45	41	80
30	50	46	80
30	55	53	80
35	25	22	60
35	30	29	60
35	35	36	60
35	40	41	60
35	45	56	60
35	50	70	60
35	55	81	60

B43504

Compact – 105 °C

Packing of snap-in capacitors

For ecological reasons the packing is pure cardboard. Components can be withdrawn (in full or in part) in the correct position for insertion.

Ordering codes for terminal styles and insulation features

Identification in 3rd block of ordering code

Snap-in capacitors			
Terminal version	Insulation version		
	PVC	PET	PVC plus PET cap
Standard terminals 6.3 mm	M000	M060	M080
Short terminals 4.5 mm	M007	M067	M087
3 terminals 4.5 mm	M002	M062	M082

Ordering examples:

B43504A9107M007 } snap-in capacitor with short terminals and standard PVC insulation
B43504A9107M062 } snap-in capacitor with 3 terminals and PET insulation
B43504A9107M080 } snap-in capacitor with standard terminals and PVC insulation with additional PET insulation cap on terminal side

Overview of available types

V_R (V DC)	200	250	400	420	450
	Case dimensions d × l (mm)				
C_R (µF)					
47			22 × 25		
68			22 × 25		22 × 30
82			22 × 30	22 × 30	22 × 35
100			22 × 35 25 × 25	22 × 35 25 × 30	22 × 35 25 × 30 30 × 25
120			22 × 35	22 × 40 25 × 30	25 × 35
150			22 × 40 30 × 25	25 × 35 30 × 30	25 × 40 30 × 30 35 × 25
180			25 × 40 30 × 30	25 × 40 30 × 30	25 × 45
220	22 × 25	22 × 30	25 × 45 30 × 35 35 × 25	25 × 45 30 × 35	25 × 50 30 × 40 35 × 30
270	22 × 25	22 × 30	25 × 50 30 × 40 35 × 30	25 × 55 30 × 40	30 × 45 35 × 35
330	22 × 30	22 × 35 25 × 30	25 × 55 30 × 45 35 × 35	30 × 45 35 × 35	30 × 50 35 × 40
390	22 × 30	25 × 35	30 × 50 35 × 40	30 × 50 35 × 40	35 × 45
470	22 × 35 25 × 30 30 × 25	22 × 45 30 × 30	30 × 55 35 × 45	35 × 45	35 × 50
560	25 × 35	25 × 40	35 × 50	35 × 50	
680	25 × 40 30 × 30 35 × 25	25 × 50 30 × 35 35 × 30	35 × 55		
820	25 × 45 35 × 30	25 × 55 30 × 40			

B43504

Compact – 105 °C

V_R (V DC)	200	250	400	420	450
	Case dimensions d × l (mm)				
C_R (µF)					
1000	25 × 50 30 × 35 35 × 30	30 × 45 35 × 40			
1200	30 × 40	30 × 55 35 × 40			
1500	30 × 50 35 × 40	35 × 50			
1800	35 × 45	35 × 55			
2200	35 × 50				

The capacitance and voltage ratings listed above are available in different cases upon request. Other voltage and capacitance ratings are also available upon request.

Technical data and ordering codes

C_R 100 Hz 20 °C µF	Case dimensions d × l mm	ESR_{typ} 100 Hz 20 °C mΩ	Z_{max} 10 kHz 20 °C mΩ	$I_{AC,max}$ 100 Hz 60 °C A	$I_{AC,max}$ 100 Hz 85 °C A	$I_{AC,R}$ 1) 100 Hz 105 °C A	Ordering code (composition see below)
V_R = 200 V DC							
220	22 × 25	580	700	2.26	1.70	0.84	B43504E2227M0*#
270	22 × 25	470	570	2.51	1.90	0.93	B43504E2277M0*#
330	22 × 30	390	470	2.97	2.22	1.10	B43504A2337M0*#
390	22 × 30	330	400	3.24	2.42	1.20	B43504E2397M0*#
470	22 × 35	270	330	3.78	2.83	1.40	B43504E2477M0*#
470	25 × 30	270	330	3.80	2.86	1.41	B43504G2477M0*#
470	30 × 25	270	330	4.05	3.03	1.50	B43504F2477M0*#
560	25 × 35	230	280	4.40	3.40	1.63	B43504E2567M0*#
680	25 × 40	190	230	5.13	3.90	1.90	B43504E2687M0*#
680	30 × 30	190	230	5.02	3.76	1.86	B43504H2687M0*#
680	35 × 25	190	230	5.40	4.04	2.00	B43504F2687M0*#
820	25 × 45	160	190	5.94	4.50	2.20	B43504E2827M0*#
820	35 × 30	160	190	6.21	4.70	2.30	B43504A2827M0*#
1000	25 × 50	140	180	6.75	5.06	2.50	B43504G2108M0*#
1000	30 × 35	140	180	6.48	4.90	2.40	B43504H2108M0*#
1000	35 × 30	140	180	6.77	5.07	2.51	B43504J2108M0*#
1200	30 × 40	120	150	7.37	5.60	2.73	B43504F2128M0*#
1500	30 × 50	100	120	8.96	6.72	3.32	B43504F2158M0*#
1500	35 × 40	100	120	9.18	6.90	3.40	B43504G2158M0*#
1800	35 × 45	80	100	10.5	7.90	3.90	B43504F2188M0*#
2200	35 × 50	65	80	11.9	9.10	4.43	B43504F2228M0*#
V_R = 250 V DC							
220	22 × 30	580	700	2.40	1.80	0.89	B43504A2227M0*#
270	22 × 30	470	570	2.67	2.00	0.99	B43504B2277M0*#
330	22 × 35	390	470	3.10	2.34	1.15	B43504D2337M0*#
330	25 × 30	390	470	3.24	2.42	1.20	B43504C2337M0*#
390	25 × 35	330	400	3.78	2.83	1.40	B43504A2397M0*#
470	22 × 45	270	330	4.10	3.08	1.52	B43504C2477M0*#
470	30 × 30	270	330	4.32	3.23	1.60	B43504B2477M0*#
560	25 × 40	230	280	4.64	3.47	1.72	B43504B2567M0*#
680	25 × 50	190	230	5.67	4.24	2.10	B43504A2687M0*#

Composition of ordering code

* = Insulation feature
- 0 = PVC insulation
- 6 = PET insulation
- 8 = PVC insulation with additional PET insulation cap on terminal side

\# = Terminal style
- 0 = snap-in standard terminals (6.3 mm)
- 2 = snap-in 3 terminals (4.5 mm)
- 7 = snap-in short terminals (4.5 mm)

1) 120-Hz conversion factor of ripple current: I_{AC} (120 Hz) = 1.03 · I_{AC} (100 Hz)

B43504

Compact – 105 °C

Technical data and ordering codes

C_R 100 Hz 20 °C µF	Case dimensions d × l mm	ESR_{typ} 100 Hz 20 °C mΩ	Z_{max} 10 kHz 20 °C mΩ	$I_{AC,max}$ 100 Hz 60 °C A	$I_{AC,max}$ 100 Hz 85 °C A	$I_{AC,R}$ 2) 100 Hz 105 °C A	Ordering code (composition see below)
V_R = 250 V DC							
680	30 × 35	190	230	5.29	3.97	1.96	B43504C2687M0*#
680	35 × 30	190	230	5.56	4.18	2.06	B43504D2687M0*#
820	25 × 55	160	190	6.37	4.76	2.36	B43504C2827M0*#
820	30 × 40	160	190	6.10	4.57	2.26	B43504D2827M0*#
1000	30 × 45	140	180	7.04	5.27	2.61	B43504B2108M0*#
1000	35 × 40	140	180	7.56	5.70	2.80	B43504C2108M0*#
1200	30 × 55	120	150	8.34	6.24	3.09	B43504B2128M0*#
1200	35 × 40	120	150	8.15	6.11	3.02	B43504C2128M0*#
1500	35 × 50	100	120	9.88	7.40	3.66	B43504A2158M0*#
1800	35 × 55	80	100	11.2	8.40	4.16	B43504A2188M0*#
V_R = 400 V DC							
47	22 × 25	1860	2310	1.05	0.79	0.39	B43504A9476M0*#
68	22 × 25	1290	1600	1.26	0.95	0.47	B43504A9686M0*#
82	22 × 30	1070	1320	1.48	1.11	0.55	B43504A9826M0*#
100	22 × 35	880	1090	1.72	1.36	0.64	B43504A9107M0*#
100	25 × 25	880	1090	1.64	1.30	0.61	B43504B9107M0*#
120	22 × 35	730	910	1.89	1.41	0.70	B43504A9127M0*#
150	22 × 40	580	730	2.21	1.70	0.82	B43504A9157M0*#
150	30 × 25	580	730	2.21	1.70	0.82	B43504B9157M0*#
180	25 × 40	490	610	2.64	2.04	0.98	B43504A9187M0*#
180	30 × 30	490	610	2.59	2.00	0.96	B43504B9187M0*#
220	25 × 45	400	500	3.02	2.32	1.12	B43504A9227M0*#
220	30 × 35	400	500	2.99	2.30	1.11	B43504B9227M0*#
220	35 × 25	400	500	2.99	2.30	1.11	B43504D9227M0*#
270	25 × 50	320	410	3.51	2.70	1.30	B43504A9277M0*#
270	30 × 40	320	410	3.48	2.68	1.29	B43504B9277M0*#
270	35 × 30	320	410	3.51	2.70	1.30	B43504C9277M0*#

Composition of ordering code

* = Insulation feature
- 0 = PVC insulation
- 6 = PET insulation
- 8 = PVC insulation with additional PET insulation cap on terminal side

\# = Terminal style
- 0 = snap-in standard terminals (6.3 mm)
- 2 = snap-in 3 terminals (4.5 mm)
- 7 = snap-in short terminals (4.5 mm)

2) 120-Hz conversion factor of ripple current: I_{AC} (120 Hz) = 1.03 · I_{AC} (100 Hz)

Technical data and ordering codes

C_R 100 Hz 20 °C µF	Case dimensions d × l mm	ESR_{typ} 100 Hz 20 °C mΩ	Z_{max} 10 kHz 20 °C mΩ	$I_{AC,max}$ 100 Hz 60 °C A	$I_{AC,max}$ 100 Hz 85 °C A	$I_{AC,R}$ [3] 100 Hz 105 °C A	Ordering code (composition see below)
V_R = 400 V DC							
330	25 × 55	270	330	4.02	3.08	1.49	B43504C9337M0*#
330	30 × 45	270	330	4.05	3.10	1.50	B43504A9337M0*#
330	35 × 35	270	330	4.07	3.12	1.51	B43504B9337M0*#
390	30 × 50	220	280	4.59	3.50	1.70	B43504A9397M0*#
390	35 × 40	220	280	4.64	3.54	1.72	B43504B9397M0*#
470	30 × 55	190	240	5.21	3.90	1.93	B43504B9477M0*#
470	35 × 45	190	240	5.40	4.10	2.00	B43504A9477M0*#
560	35 × 50	160	200	6.02	4.60	2.23	B43504A9567M0*#
680	35 × 55	130	160	6.88	5.16	2.55	B43504A9687M0*#
V_R = 420 V DC							
82	22 × 30	1650	1950	1.48	1.12	0.55	B43504A0826M0*#
100	22 × 35	1350	1600	1.72	1.31	0.64	B43504A0107M0*#
100	25 × 30	1350	1600	1.75	1.34	0.65	B43504E0107M0*#
120	22 × 40	1130	1330	1.99	1.51	0.74	B43504A0127M0*#
120	25 × 30	1130	1330	1.94	1.47	0.72	B43504E0127M0*#
150	25 × 35	900	1070	2.29	1.74	0.85	B43504A0157M0*#
150	30 × 30	900	1070	2.37	1.80	0.88	B43504E0157M0*#
180	25 × 40	750	890	2.64	2.00	0.98	B43504A0187M0*#
180	30 × 30	750	890	2.59	1.97	0.96	B43504E0187M0*#
220	25 × 45	610	730	3.05	2.31	1.13	B43504A0227M0*#
220	30 × 35	610	730	3.02	2.29	1.12	B43504E0227M0*#
270	25 × 55	500	590	3.64	2.73	1.35	B43504B0277M0*#
270	30 × 40	500	590	3.51	2.66	1.30	B43504A0277M0*#
330	30 × 45	410	490	4.05	3.08	1.50	B43504A0337M0*#
330	35 × 35	410	490	4.10	3.11	1.52	B43504E0337M0*#
390	30 × 50	350	410	4.59	3.48	1.70	B43504A0397M0*#
390	35 × 40	350	410	4.64	3.54	1.72	B43504E0397M0*#
470	35 × 45	290	340	5.31	4.05	1.97	B43504A0477M0*#
560	35 × 50	240	290	6.02	4.52	2.23	B43504A0567M0*#

Composition of ordering code

* = Insulation feature
- 0 = PVC insulation
- 6 = PET insulation
- 8 = PVC insulation with additional PET insulation cap on terminal side

\# = Terminal style
- 0 = snap-in standard terminals (6.3 mm)
- 2 = snap-in 3 terminals (4.5 mm)
- 7 = snap-in short terminals (4.5 mm)

3) 120-Hz conversion factor of ripple current: I_{AC} (120 Hz) = 1.03 · I_{AC} (100 Hz)

B43504

Compact – 105 °C

Technical data and ordering codes

C_R 100 Hz 20 °C µF	Case dimensions d × l mm	ESR_{typ} 100 Hz 20 °C mΩ	Z_{max} 10 kHz 20 °C mΩ	$I_{AC,max}$ 100 Hz 60 °C A	$I_{AC,max}$ 100 Hz 85 °C A	$I_{AC,R}$ [4] 100 Hz 105 °C A	Ordering code (composition see below)
V_R = 450 V DC							
68	22 × 30	1990	2350	1.35	1.01	0.50	B43504A5686M0*#
82	22 × 35	1650	1950	1.56	1.20	0.58	B43504A5826M0*#
100	22 × 35	1350	1600	1.72	1.30	0.64	B43504A5107M0*#
100	25 × 30	1350	1600	1.75	1.31	0.65	B43504B5107M0*#
100	30 × 25	1350	1600	1.80	1.40	0.67	B43504C5107M0*#
120	25 × 35	1130	1330	2.05	1.60	0.76	B43504A5127M0*#
150	25 × 40	900	1070	2.40	1.82	0.89	B43504A5157M0*#
150	30 × 30	900	1070	2.37	1.80	0.88	B43504B5157M0*#
150	35 × 25	900	1070	2.48	1.90	0.92	B43504C5157M0*#
180	25 × 45	750	890	2.75	2.10	1.02	B43504A5187M0*#
220	25 × 50	610	730	3.24	2.42	1.20	B43504A5227M0*#
220	30 × 40	610	730	3.24	2.42	1.20	B43504B5227M0*#
220	35 × 30	610	730	3.24	2.42	1.20	B43504C5227M0*#
270	30 × 45	500	590	3.78	2.83	1.40	B43504A5277M0*#
270	35 × 35	500	590	3.78	2.83	1.40	B43504B5277M0*#
330	30 × 50	410	490	4.32	3.30	1.60	B43504A5337M0*#
330	35 × 40	410	490	4.32	3.30	1.60	B43504B5337M0*#
390	35 × 45	350	410	4.86	3.70	1.80	B43504A5397M0*#
470	35 × 50	290	340	5.67	4.24	2.10	B43504A5477M0*#

Composition of ordering code

* = Insulation feature
- 0 = PVC insulation
- 6 = PET insulation
- 8 = PVC insulation with additional PET insulation cap on terminal side

\# = Terminal style
- 0 = snap-in standard terminals (6.3 mm)
- 2 = snap-in 3 terminals (4.5 mm)
- 7 = snap-in short terminals (4.5 mm)

4) 120-Hz conversion factor of ripple current: I_{AC} (120 Hz) = 1.03 · I_{AC} (100 Hz)

Useful life[1)]

depending on ambient temperature T_A under ripple current operating conditions

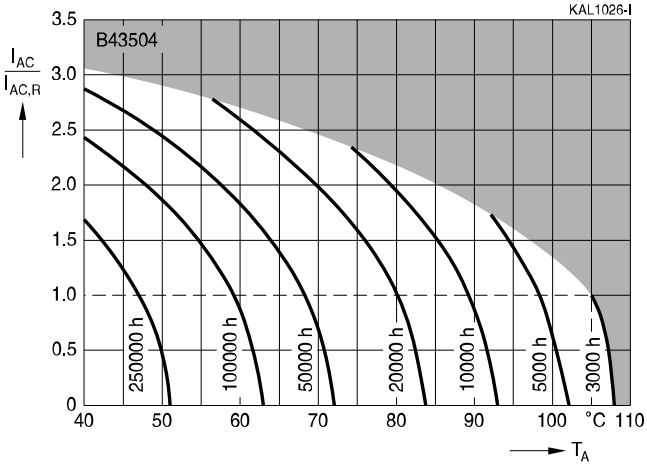

Frequency factor of permissible ripple current I_{AC} versus frequency f

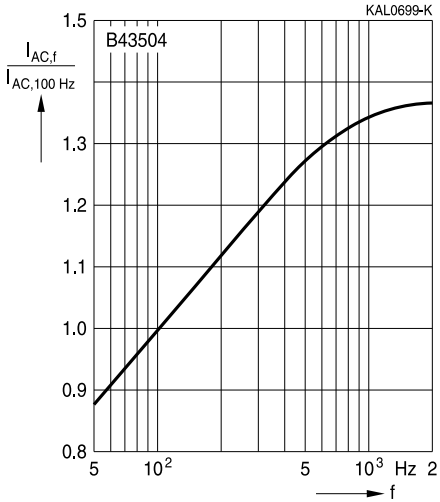

Frequency characteristics of ESR

Typical behavior

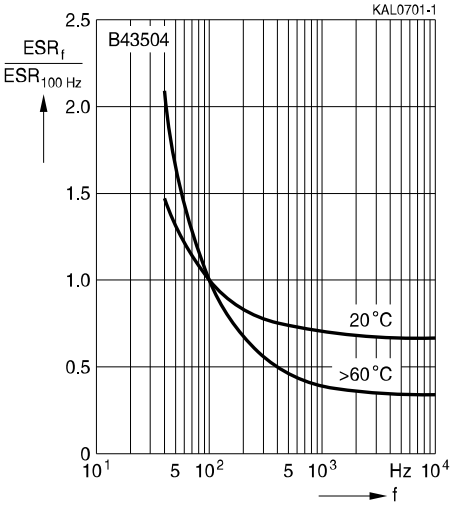

1) Refer to chapter "General technical information, 5 Useful life" on how to interpret useful life.

Impedance Z versus frequency f

Typical behavior at 20 °C

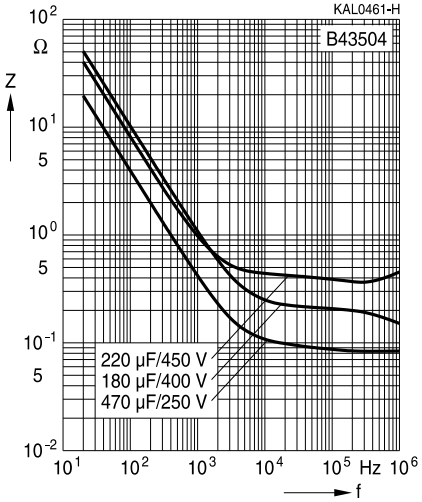

Cautions and warnings

Personal safety

The electrolytes used by EPCOS have been optimized both with a view to the intended application and with regard to health and environmental compatibility. They do not contain any solvents that are detrimental to health, e.g. dimethyl formamide (DMF) or dimethyl acetamide (DMAC).
Furthermore, some of the high-voltage electrolytes used by EPCOS are self-extinguishing.

As far as possible, EPCOS does not use any dangerous chemicals or compounds to produce operating electrolytes. However, in exceptional cases, such materials must be used in order to achieve specific physical and electrical properties because no alternative materials are currently known. However, the amount of dangerous materials used in our products is limited to an absolute minimum.

Materials and chemicals used in EPCOS aluminum electrolytic capacitors are continuously adapted in compliance with the EPCOS Corporate Environmental Policy and the latest EU regulations and guidelines such as RoHS, REACH/SVHC, GADSL, and ELV.

MDS (Material Data Sheets) are available on the EPCOS website for all types listed in the data book. MDS for customer specific capacitors are available upon request.
MSDS (Material Safety Data Sheets) are available for all of our electrolytes upon request.

Nevertheless, the following rules should be observed when handling aluminum electrolytic capacitors: No electrolyte should come into contact with eyes or skin. If electrolyte does come into contact with the skin, wash the affected areas immediately with running water. If the eyes are affected, rinse them for 10 minutes with plenty of water. If symptoms persist, seek medical treatment. Avoid inhaling electrolyte vapor or mists. Workplaces and other affected areas should be well ventilated. Clothing that has been contaminated by electrolyte must be changed and rinsed in water.

B43504

Compact – 105 °C

Product safety

The table below summarizes the safety instructions that must be observed without fail. A detailed description can be found in the relevant sections of chapter "General technical information".

Topic	Safety information	Reference chapter "General technical information"
Polarity	Make sure that polar capacitors are connected with the right polarity.	1 "Basic construction of aluminum electrolytic capacitors"
Reverse voltage	Voltages polarity classes should be prevented by connecting a diode.	3.1.6 "Reverse voltage"
Mounting position of screw-terminal capacitors	Do not mount the capacitor with the terminals (safety vent) upside down.	11.1. "Mounting positions of capacitors with screw terminals"
Robustness of terminals	The following maximum tightening torques must not be exceeded when connecting screw terminals: M5: 2.5 Nm M6: 4.0 Nm	11.3 "Mounting torques"
Mounting of single-ended capacitors	The internal structure of single-ended capacitors might be damaged if excessive force is applied to the lead wires. Avoid any compressive, tensile or flexural stress. Do not move the capacitor after soldering to PC board. Do not pick up the PC board by the soldered capacitor. Do not insert the capacitor on the PC board with a hole space different to the lead space specified.	11.4 "Mounting considerations for single-ended capacitors"
Soldering	Do not exceed the specified time or temperature limits during soldering.	11.5 "Soldering"
Soldering, cleaning agents	Do not allow halogenated hydrocarbons to come into contact with aluminum electrolytic capacitors.	11.6 "Cleaning agents"
Upper category temperature	Do not exceed the upper category temperature.	7.2 "Maximum permissible operating temperature"
Passive flammability	Avoid external energy, such as fire or electricity.	8.1 "Passive flammability"

Topic	Safety information	Reference chapter "General technical information"
Active flammability	Avoid overload of the capacitors.	8.2 "Active flammability"
Maintenance	Make periodic inspections of the capacitors. Before the inspection, make sure that the power supply is turned off and carefully discharge the electricity of the capacitors. Do not apply any mechanical stress to the capacitor terminals.	10 "Maintenance"
Storage	Do not store capacitors at high temperatures or high humidity. Capacitors should be stored at +5 to +35 °C and a relative humidity of ≤ 75%.	7.3 Storage conditions
		Reference chapter "Capacitors with screw terminals"
Breakdown strength of insulating sleeves	Do not damage the insulating sleeve, especially when ring clips are used for mounting.	"Screw terminals – accessories"

Symbols and terms

Symbol	English	German
C	Capacitance	Kapazität
C_R	Rated capacitance	Nennkapazität
C_S	Series capacitance	Serienkapazität
$C_{S,T}$	Series capacitance at temperature T	Serienkapazität bei Temperatur T
C_f	Capacitance at frequency f	Kapazität bei Frequenz f
d	Case diameter, nominal dimension	Gehäusedurchmesser, Nennmaß
d_{max}	Maximum case diameter	Maximaler Gehäusedurchmesser
ESL	Self-inductance	Eigeninduktivität
ESR	Equivalent series resistance	Ersatzserienwiderstand
ESR_f	Equivalent series resistance at frequency f	Ersatzserienwiderstand bei Frequenz f
ESR_T	Equivalent series resistance at temperature T	Ersatzserienwiderstand bei Temperatur T
f	Frequency	Frequenz
I	Current	Strom
I_{AC}	Alternating current (ripple current)	Wechselstrom
$I_{AC,rms}$	Root-mean-square value of alternating current	Wechselstrom, Effektivwert
$I_{AC,f}$	Ripple current at frequency f	Wechselstrom bei Frequenz f
$I_{AC,max}$	Maximum permissible ripple current	Maximal zulässiger Wechselstrom
$I_{AC,R}$	Rated ripple current	Nennwechselstrom
$I_{AC,R}$ (B)	Rated ripple current for base cooling	Nennwechselstromstrom für Bodenkühlung
I_{leak}	Leakage current	Reststrom
$I_{leak,op}$	Operating leakage current	Betriebsreststrom
l	Case length, nominal dimension	Gehäuselänge, Nennmaß
l_{max}	Maximum case length (without terminals and mounting stud)	Maximale Gehäuselänge (ohne Anschlüsse und Gewindebolzen)
R	Resistance	Widerstand
R_{ins}	Insulation resistance	Isolationswiderstand
R_{symm}	Balancing resistance	Symmetrierwiderstand
T	Temperature	Temperatur
ΔT	Temperature difference	Temperaturdifferenz
T_A	Ambient temperature	Umgebungstemperatur
T_C	Case temperature	Gehäusetemperatur
T_B	Capacitor base temperature	Temperatur des Becherbodens
t	Time	Zeit
Δt	Period	Zeitraum
t_b	Service life (operating hours)	Brauchbarkeitsdauer (Betriebszeit)

Symbol	English	German
V	Voltage	Spannung
V_F	Forming voltage	Formierspannung
V_{op}	Operating voltage	Betriebsspannung
V_R	Rated voltage, DC voltage	Nennspannung, Gleichspannung
V_S	Surge voltage	Spitzenspannung
X_C	Capacitive reactance	Kapazitiver Blindwiderstand
X_L	Inductive reactance	Induktiver Blindwiderstand
Z	Impedance	Scheinwiderstand
Z_T	Impedance at temperature T	Scheinwiderstand bei Temperatur T
$\tan \delta$	Dissipation factor	Verlustfaktor
λ	Failure rate	Ausfallrate
ε_0	Absolute permittivity	Elektrische Feldkonstante
ε_r	Relative permittivity	Dielektrizitätszahl
ω	Angular velocity; $2 \cdot \pi \cdot f$	Kreisfrequenz; $2 \cdot \pi \cdot f$

Note

All dimensions are given in mm.

Important notes

The following applies to all products named in this publication:

1. Some parts of this publication contain **statements about the suitability of our products for certain areas of application**. These statements are based on our knowledge of typical requirements that are often placed on our products in the areas of application concerned. We nevertheless expressly point out **that such statements cannot be regarded as binding statements about the suitability of our products for a particular customer application**. As a rule, EPCOS is either unfamiliar with individual customer applications or less familiar with them than the customers themselves. For these reasons, it is always ultimately incumbent on the customer to check and decide whether an EPCOS product with the properties described in the product specification is suitable for use in a particular customer application.
2. We also point out that **in individual cases, a malfunction of electronic components or failure before the end of their usual service life cannot be completely ruled out in the current state of the art, even if they are operated as specified**. In customer applications requiring a very high level of operational safety and especially in customer applications in which the malfunction or failure of an electronic component could endanger human life or health (e.g. in accident prevention or lifesaving systems), it must therefore be ensured by means of suitable design of the customer application or other action taken by the customer (e.g. installation of protective circuitry or redundancy) that no injury or damage is sustained by third parties in the event of malfunction or failure of an electronic component.
3. **The warnings, cautions and product-specific notes must be observed.**
4. In order to satisfy certain technical requirements, **some of the products described in this publication may contain substances subject to restrictions in certain jurisdictions (e.g. because they are classed as hazardous)**. Useful information on this will be found in our Material Data Sheets on the Internet (www.epcos.com/material). Should you have any more detailed questions, please contact our sales offices.
5. We constantly strive to improve our products. Consequently, **the products described in this publication may change from time to time**. The same is true of the corresponding product specifications. Please check therefore to what extent product descriptions and specifications contained in this publication are still applicable before or when you place an order. We also **reserve the right to discontinue production and delivery of products**. Consequently, we cannot guarantee that all products named in this publication will always be available. The aforementioned does not apply in the case of individual agreements deviating from the foregoing for customer-specific products.
6. Unless otherwise agreed in individual contracts, **all orders are subject to the current version of the "General Terms of Delivery for Products and Services in the Electrical Industry" published by the German Electrical and Electronics Industry Association (ZVEI)**.
7. The trade names EPCOS, BAOKE, Alu-X, CeraDiode, CeraLink, CeraPlas, CSMP, CSSP, CTVS, DeltaCap, DigiSiMic, DSSP, FilterCap, FormFit, MiniBlue, MiniCell, MKD, MKK, MLSC, MotorCap, PCC, PhaseCap, PhaseCube, PhaseMod, PhiCap, SIFERRIT, SIFI, SIKOREL, SilverCap, SIMDAD, SiMic, SIMID, SineFormer, SIOV, SIP5D, SIP5K, ThermoFuse, WindCap are **trademarks registered or pending** in Europe and in other countries. Further information will be found on the Internet at www.epcos.com/trademarks.