Pos.	Description	Q.ty	P/N
2	PIN-BRASS-D.2,23x15-TIN-BM012 B	2	406072G
1	HTSK-AL-OS172-38-B-ML73 6099 STD	1	405132

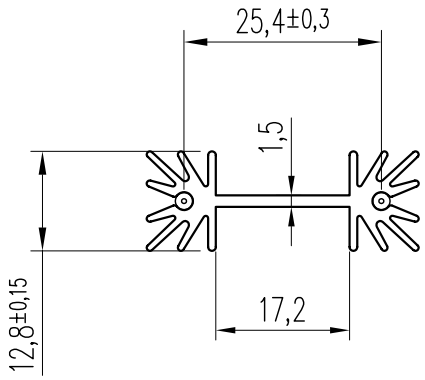

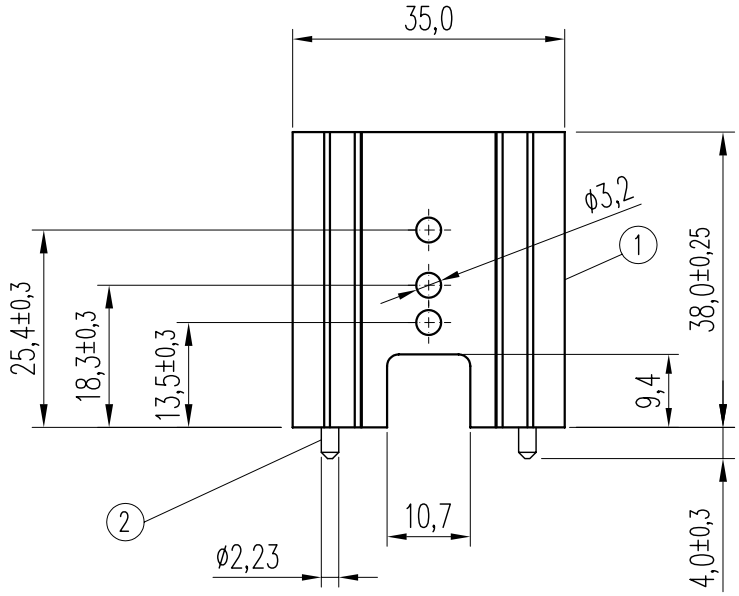

Note:
ML73 (S172/38 with pins)

Scale 1:1

THIS DOCUMENT CONTAINS AAVID THERMALLOY'S INTELLECTUAL PROPERTY WHICH IS SUPPLIED IN CONFIDENCE; IT MUST NOT BE USED FOR ANY PURPOSE OTHER THAN WHICH IT IS SUPPLIED; IT MUST NOT BE REPRODUCED WITHOUT WRITTEN PERMISSION FROM THE OWNERS (C) (DR)

REV	Date	Revision description	By
B	13Jan05	RoHS compliant pins used; ECF 327 BO refers	AS
A	30Jul02	ORIGINAL (was L07385A rev.B)	

AAVID THERMALLOY EUROPE www.aavidthermalloy.com
Via XXV Aprile, 32
40057 Cadriano - Bologna ITALY
Tel. +39 051 764011
Fax +39 051 764090
Cheney Manor
SWINDON WILTS SN2 2QN UK
Tel. +44 1793 401400
Fax +44 1793 615396
COMPANY WITH QUALITY SYSTEM CERTIFIED BY LRQA ISO 9001:2000

Format A4

Die n.
Factor
Perim.
Area
Weight

MATERIAL Aluminium EN AW-6060
GENERAL TOLERANCES Extrusion UNI3879
Machining UNI2768 m
FINISH BLACK ANODIZATION

Vis. n. 405134G
Drawn M. Calanchi
Check

DRAWING n. BC094
Description: HTSK-AL-OS172-38-B-PINS-ML73 6099 STD
CONF500-BC094 B